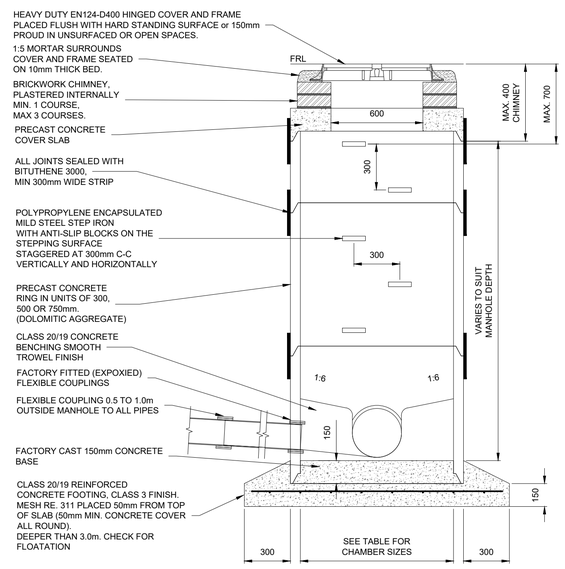

CHAMBER SIZE TABLE		
MAIN PIPE	JUNC. PIPE	CHAMBER SIZE
160 - 250	160 - 200	1000
275 - 325	160 - 250	1200
350 - 400	160 - 225	1200

TYPICAL SEWER MANHOLE DETAIL (PRECAST CONCRETE RING TYPE)

SCALE 1:20

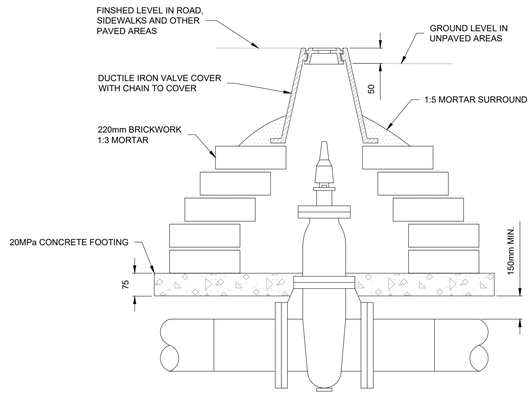

TYPICAL VALVE CHAMBER DETAIL

N.T.S.

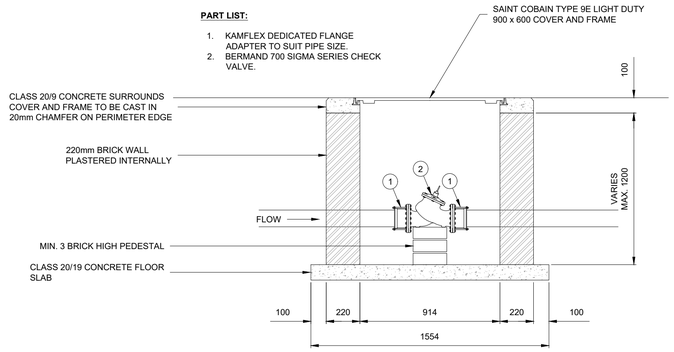

TYPICAL NON-RETURN VALVE & CHAMBER

N.T.S.

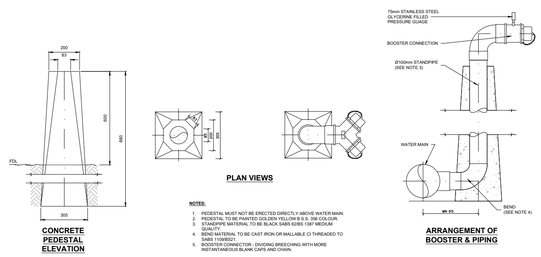

TYPICAL BOOSTER CONNECTION DETAIL

N.T.S.

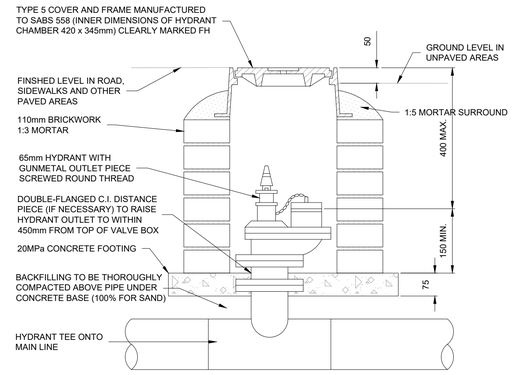

TYPICAL HYDRANT CHAMBER DETAIL

N.T.S.

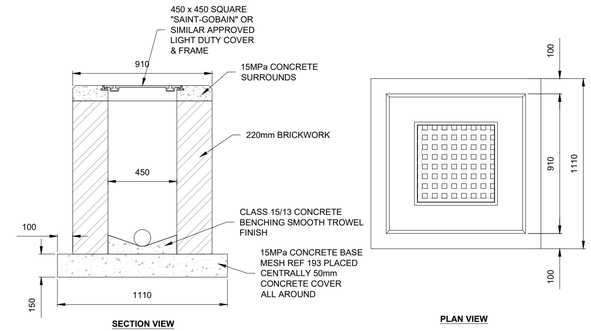

TYPICAL 450x450 STORMWATER MANHOLE

N.T.S.

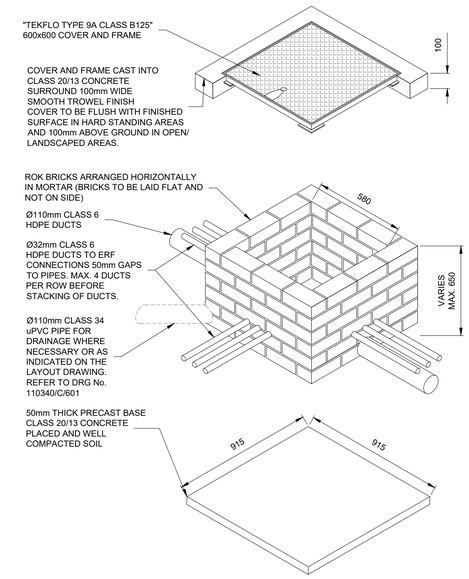

TYPICAL JUNCTION BOX DETAIL

N.T.S.

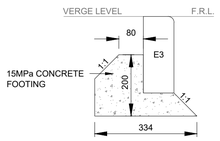

TYPICAL E3 EDGING DETAIL

SCALE 1:10

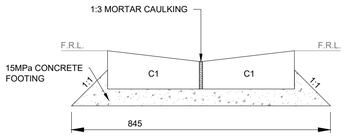

TYPICAL C1-C1 CHANNEL DETAIL

SCALE 1:10

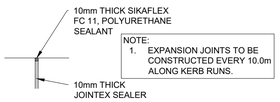

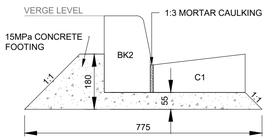

TYPICAL BK2-C1 KERB & CHANNEL DETAIL

SCALE 1:10

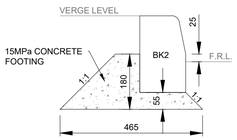

TYPICAL BK2 KERB DETAIL

SCALE 1:10

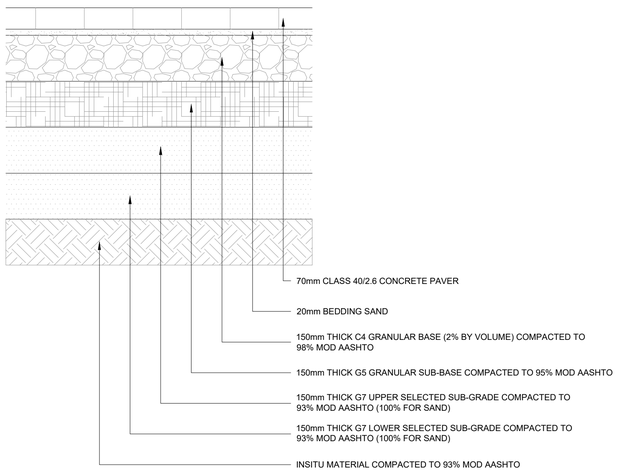

TYPICAL BRICK PAVING LAYERWORKS

N.T.S.

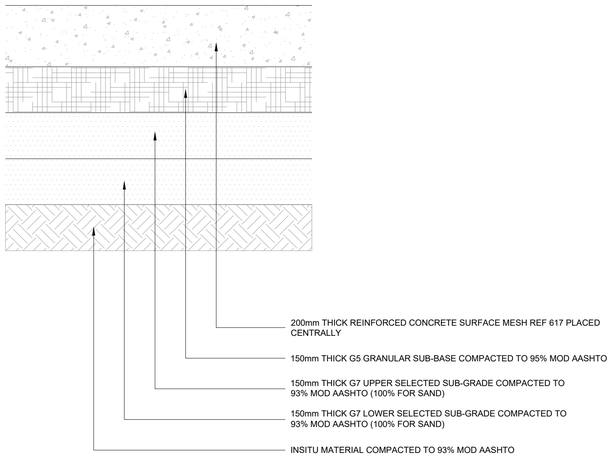

TYPICAL CONCRETE SURFACE LAYERWORKS

N.T.S.

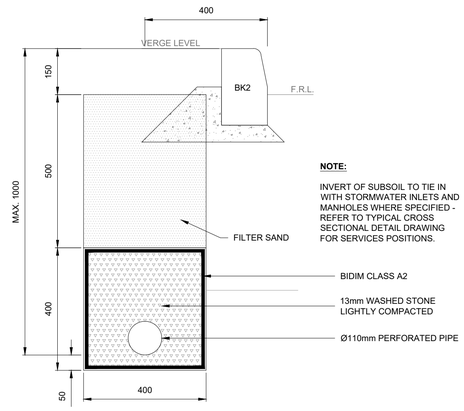

TYPICAL SUB-SOIL DRAIN DETAIL

N.T.S.

Rev.	Date	Description	Rev. by
A	25-04-2022	FOR TENDER	REL

ELEMENT Consulting Engineers
A FIFTH DIMENSION TO ENGINEERING

Block C, Oxford Gate,
54 Oxford Street,
Durbanville, 7550

P O Box 1142,
Durbanville, 7551

Tel: +27 21 975 1718
Fax: +27 21 976 8495
E-Mail: info@eceng.co.za

Client/Employer

LANGEBERG MUNISIPALITEIT MUNICIPALITY MASIPALA

Project

ASHTON
MATERIAL RECOVERY FACILITY

Plan Description

GENERAL DETAILS DRAWING

	Name	Signature
Designed	REL	
Drawn	REL	
Checked	BV	
Approved	BV	
Pr. No.		

Scale: AS SHOWN — ORIGINAL SIZE A1

Contract No. 2104161

Drawing No. 2104161/C/600 — Revision A

COPYRIGHT IS VESTED IN ELEMENT CONSULTING ENGINEERS (PTY) LTD IN TERMS OF THE COPYRIGHT ACT (ACT 98 OF 1978).

E:\Work\GENERAL DETAILS - 06\DEC2021.dwg